Zenith

Monitor Arms Specification







CONTENTS:

Dynamo Dynamic Monitor Arm	2
Flo Monitor Arm	3
Flo Plus Monitor Arm	4
Flo X Monitor Arm	5
Lima Monitor Arm	6
M2.1 Monitor Arm	7
M8.1 Monitor Arm	8
Ollin Monitor Arm	9
Ora Monitor Arm	10
Platinum Monitor Arm	11
Rising Monitor Arm	12
Tallo Monitor Arm	13
Apollo Classic Monitor Arm	14
A20 Dynamic Base Mount Single Monitor Arm	15
A20 Dynamic Post Mount Monitor Arm	16
Valor-M	17
Valor-HD Single	18
Valor-HD Dual Crossbar	19

Zenith

Dynamo Dynamic Monitor Arm

Features:
Dynamo is a dynamic monitor arm intuitively designed to deliver seamless handling across installation, mounting and adjusting. Dynamo effortlessly rotates, pivots and extends, enabling tool-less and absolute adjustment to minimise eye and posture strain. Dynamo comes with 180 degree locking mechanism for lateral arm movement and load rating of 2-8kg for flat screens only.

Options:
- Vesa mount laptop tray

Design: CMS Electracom

Warranty: 5 years

Finishes:

Powder coat:

White Black

Dimensions:

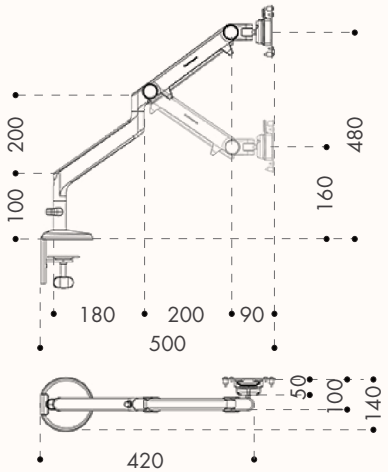

Flo Monitor Arm

Features:
Flo Monitor Arm primary purpose is to support a single monitor screen but due to its ingenious design, it can be easily customised to support a laptop. Achieved by the use of geometric Flo Spring Technology, its unique design is protected by four international patents. Its design provides unrivaled degree of flexibility for touch screens.

The monitor arm also supports 3kg to 9kg load range, ideal for mounting lighter technology such as monitors and laptops. Available with a Flo Split Clamp and 3 point cable management guide to prevent clutter of cables. The Vesa Plate attached to the arm allows users to rotate their screen portrait to landscape. It also consists of a weight gauge indicator that reduces its installation time and provides consistent performance.

Design: CBS DESIGN for COLEBROOK BOSSON SAUNDERS

Warranty: 12 years

Awards: Reddot Design Award Winner 2011

Finishes:

Power coat:

White Black Silver

Dimensions:

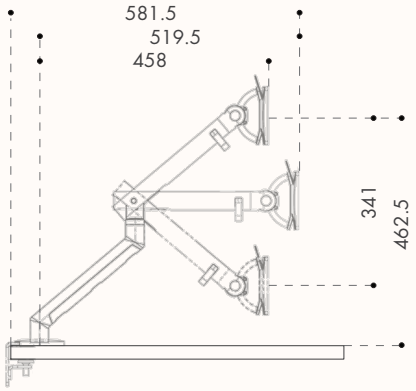

Flo Plus Monitor Arm

Features:
Flo Plus is able to support screens ranging from 6-18kg ensuring that screens with in-built processors can still be used in an ergonomic manner with a wide range of articulation. Flo Plus is able to use the patented spring technology to power the arm, ensuring minimal force/ effort is required to position the screen.

Flo Plus Single
Flo Plus Single comes with a head mount to support a single screen in the load range of 8.5 - 18kg. It is compatible with a split clamp designed to fit in restricted space at rear of the desk and comes with an integrated cable management to prevent clutter of cables. The Vesa Plate attached to the arm allows users to rotate their screen portrait to landscape. It also consists of a visual indicator gauge for easy replication when installing multiple monitor arms.

Flo Plus Dual
Flo Plus Dual is designed with a Dual Mount Bar to support dual screens in the load range of 3.25kg – 8kg. It allows two widescreens of up to 24" in size to be mounted in either portrait or landscape position. The screen support heads have been designed to be reversible, enabling the user to install the screens in a 30° cockpit or flat screen setup by simply swapping the heads around on the support bar. The central swivel joint ensures installation is perfectly horizontal. Also, available with an adjustable handle for ease of movement.

Options:
- Single and dual monitor arms
- Dual Mount Bar available with Bar Handle that fits easily and securely

Design: CBS DESIGN for COLEBROOK BOSSON SAUNDERS

Warranty: 12 years

Finishes:

Flo Plus Arm, Split Arm, Dual Mount Bar Powder coat:

White

Flo Plus Single Head Mount Powder coat:

Black

Dimensions:

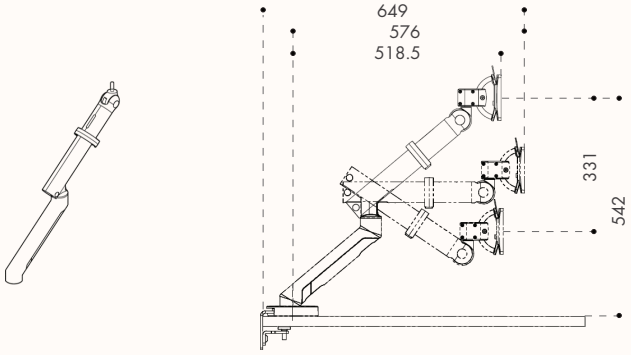

Flo Plus Single Monitor Arm

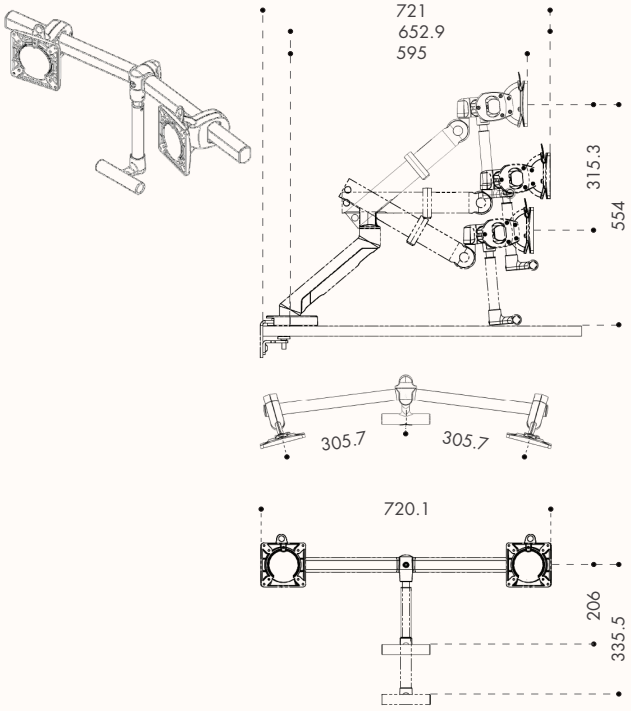

Flo Plus Dual Monitor Arm

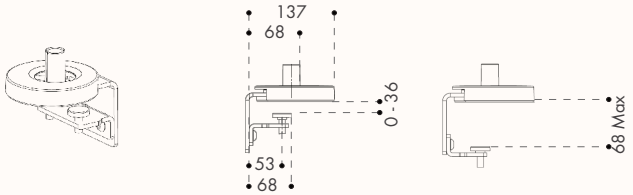

Flo Plus Split Clamp

Flo X Monitor Arm

Features:
Flo X is a new dynamic monitor arm designed to support larger and heavier displays, including widescreen and curved monitor formats. Configurable Dual Spring Technology permits support of a wide weight range - 3kg to 18kg. Available with the next generation D-Ring tilt permits enhanced support of curved monitors. Full cable management from monitor to desktop.

Design: CBS DESIGN for COLEBROOK BOSSON SAUNDERS

Warranty: 12 years

Finishes:

Powder coat:

White Black

Dimensions:

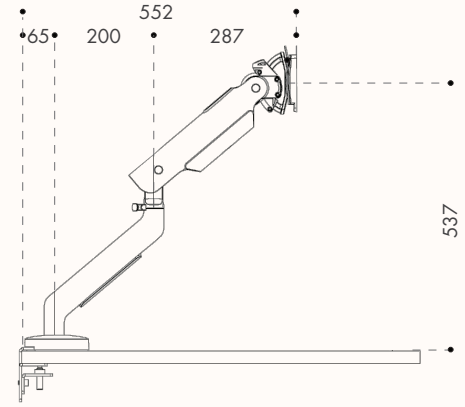

Highest Arm Position

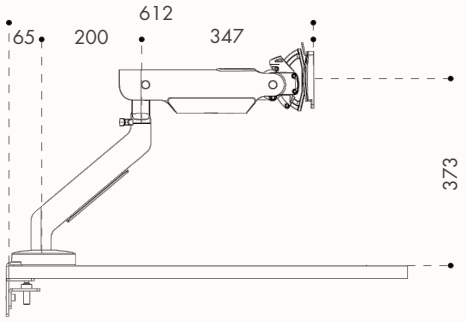

Mid Arm Position

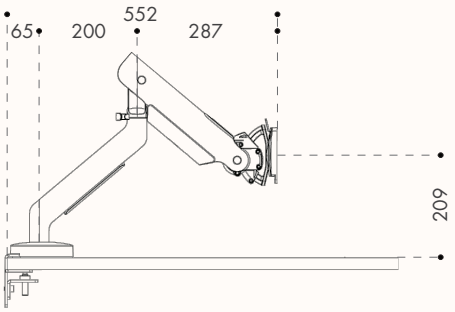

Lowest Arm Position

Lima Monitor Arm

Features:
Lima monitor arm is easy to install and adjust. It comprises of a clamp, post and require minimal tools to install. The post and clamp comes in one piece, which attaches to the desk using a thumbwheel screw, and the arm then slides into the grooves on the post. Adding another monitor is quick and easy to do. Just use another Lima arm, and slide it directly on to the post. No tools, and no need to remove the existing arm, screen and cables. With the press of a button, Lima allows you to move a screen up or down to the ideal height. And if using dual screens, users can move each one independently. Being able to tailor each screen height and distance to the users unique needs helps them to adopt a good posture and allows for healthy interaction between the users and their technology. Lima's head offers the ability to tilt the screen up to 80 degree back or 10 degree forward. This helps users to set the screen to their unique specifications, taking into consideration lighting in their workspace and the increased use of touchscreen devices in the modern workspace. Lima monitor arms also supports a monitor for up to 6.5kg and available with a 3 point cable management guide to prevent clutter of cables. Material selection and 'design-for-disassembly' make Lima 100% recyclable at the end of its operational life.

Options:
- Single or dual monitor arm

Design: CBS DESIGN for COLEBROOK BOSSON SAUNDERS

Warranty: 12 years

Finishes:

Powder coat:

White Black

Dimensions:

LMA/001/001 Lima Arm including Post & Clamp & LMA/001/002 Lima Arm

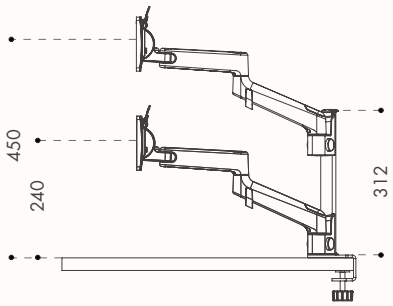

Vertical Reach

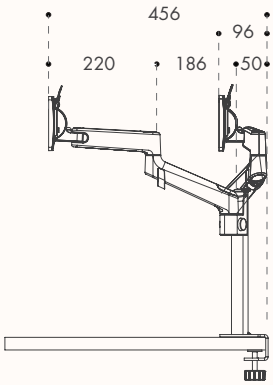

Horizontal Reach

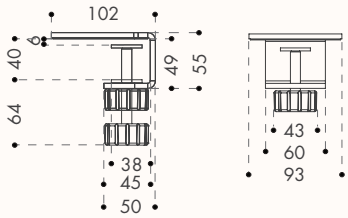

Clamp

M2.1 Monitor Arm

Features:
M2.1 Single Monitor Arm supports a better working posture, creates more usable desktop space and helps maintain a clutter-free environment. It offers quick, simple installation and industry-leading flexibility thanks to patent-pending Quick Release joints that instantly snap together for a secure and robust fit. With innovative features like its Compensator Mechanism and Self-Lubricating Precision Bearings, M2.1 allows users to effortlessly adjust their monitor to their optimal ergonomic position while also providing top-to-bottom cable management.
It features the lowest cost of ownership of any monitor arm, meaning it is the easiest, quickest, and most cost-effective arm to install and modify for future moves, additions and changes to the workstation. Smart Stop allows the user to customize the rotation of the arm, preventing overhang and protecting surrounding equipment. In addition, a built-in Counterbalance Indicator provides the ability to counterbalance the monitor weight before monitor installation to reduce expensive computer setup costs. Quick Release Joints instantly snap together for a secure and robust fit, simplifying installation.

The arm is able to hold up to 2.5 - 7kg.

Options:
- M/Connect 2 docking station and M/Power integrated docking stations, to conveniently bring power and data directly to the user

Design: HUMANSCALE

Warranty: 15 years

Finishes: Monitor Arms powder coated in polished aluminium with white trim or black with black trim.

M/Connect 2 Docking Station Powder coat:

White Black

Dimensions

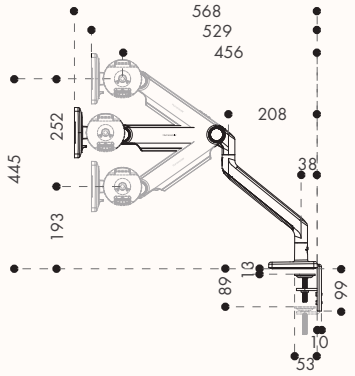

Single Monitor Arm

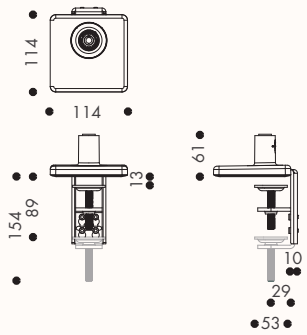

Standard Clamp & Base

M8.1 Monitor Arm

Features:
M8.1 is a monitor arm that instantly improves the comfort, health and productivity of any workspace. It is a heavy duty monitor arm that allows the user to view their 2.8 - 12.7kg monitor at an optimal ergonomic position. Available with flexible rubber channels that easily hide, protect and manage your cables. A patented, weight-compensating spring technology enables smooth and uniform height adjustment. A built-in Counterbalance Indicator provides the ability to counterbalance the monitor weight before monitor installation to reduce expensive computer setup costs. Patent-pending Smart Stop allows the user to customize the rotation of the arm, preventing overhang and protecting surrounding equipment. Patent-Pending Quick Release Joints instantly snap together for a secure and robust fit, simplifying installation. Only one tool is required, and its neatly concealed inside the arm base.

M8.1 Dual Monitor Arm comes with a crossbar support. It is available with a two piece clamp mount with base and is fully compatible with both traditional desks and sit to stand workstations.

Options:
- Single or dual monitor arm
- M/Connect 2 docking station and M/Power integrated docking stations, to conveniently bring power and data directly to the user

Design: HUMANSCALE

Warranty: 15 years

Finishes: Monitor Arms powder coated in polished aluminium with white trim or black with black trim.

M/Connect 2 Docking Station Powder coat:

White Black

Dimensions:

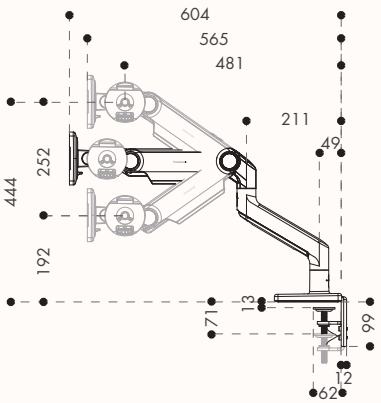

Single Monitor Arm

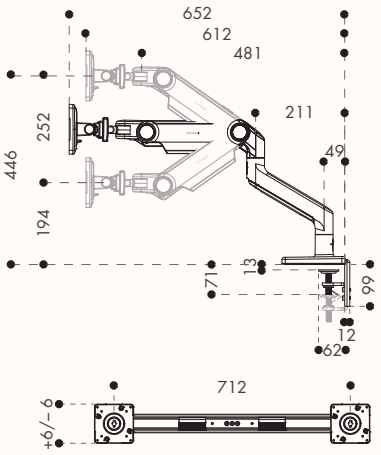

Dual Monitor Arm with Crossbar Support

Ollin Monitor Arm

Features:
Ollin is a revolutionary monitor arm that supports the screen technology of today and helps the user prepare for the screen technology of the future. It is designed with ease of adjustment to support better posture: because it's so easy to move the screen to exactly the right position.

Ollin Dynamic Monitor Arm
The Dynamic monitor arm is powered by innovative 'Technical Cord' system and is able to be reconfigured 180 degrees to prevent clashing with rear mounted furniture panels. It comes with a Vesa Tilt Head that fits quickly and easily to the Ollin Monitor Arm. Quick-release Vesa plate with optional security screw is also available. The Vesa Tilt Head allows users to rotate their screen portrait to landscape. The monitor arms support 0kg to 9kg load range, ideal for mounting lighter technology such as slim and lightweight monitors, tablets and laptops. Available with a 3 point cable management guide to prevent clutter of cables and a range of interchangeable front-end accessories to tailor the function of the arm, including: Dual Screen Mount Bar, Tablet Mount and Laptop Mount.

Ollin Dual Mount Bar
The Dual Mount Bar can be attached to the Ollin monitor arm (as a direct replacement for the standard VESA tilt head). It supports 0kg to 8kg load range and features integrated cable management. It is also designed with a central pivot to permit horizontal leveling of the complete dual bar.

Options:
- Single Dynamic Monitor Arm and Dual Mount Bar
- Dual Mount Bar available with Bar Handle the fits easily and securely

Design: CBS DESIGN for COLEBROOK BOSSON SAUNDERS

Warranty: 12 years

Awards: Reddot Design Award Winner 2017

Finishes:

Power coat:

White Black*

Note: *Dual Mount Bar, Dual Mount Bar Handle & Vesa Tilt Head in black only.

Dimensions:

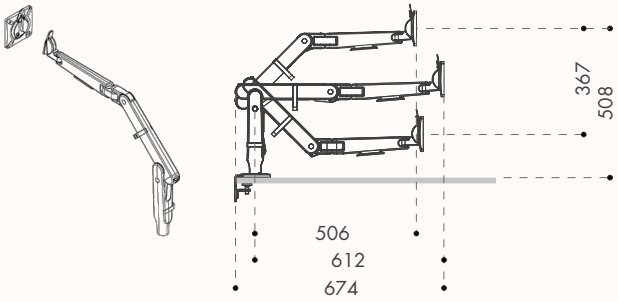

Single Dynamic Monitor Arm
Configuration shows Ollin mounted to a Split Clamp

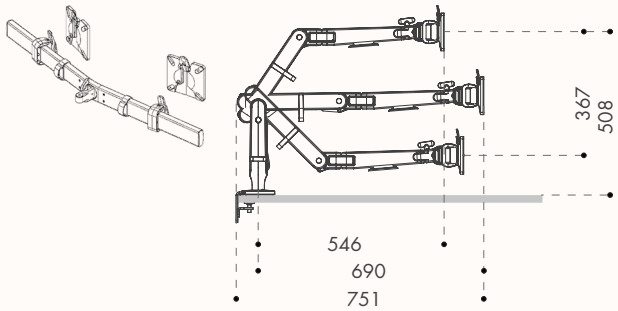

Dual Mount Bar
Configuration shows Dual Bar mounted to Ollin Arm on a Split Clamp

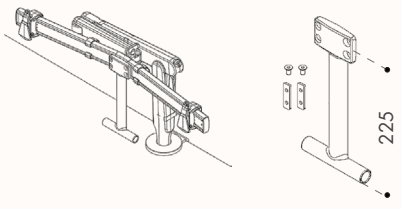

Dual Mount Bar Handle

Ora Monitor Arm

Features:
Ora monitor arm is suitable for single curved or flat display up to 35 inches. With a +45° tilt mechanism for dynamic viewing, Ora also features a 180° arm rotation limiter to prevent interference with walls and workstation dividers. Featuring an adjustable portrait to landscape rotation tension and supplied with a desk clamp, dynamic arm, VESA plate, and display mounting fasteners, Ora has a contemporary style to suit any interior.

Design: ATDEC

Warranty: 10 years

Finishes:

Powder coat:



White Black Silver

Dimensions:

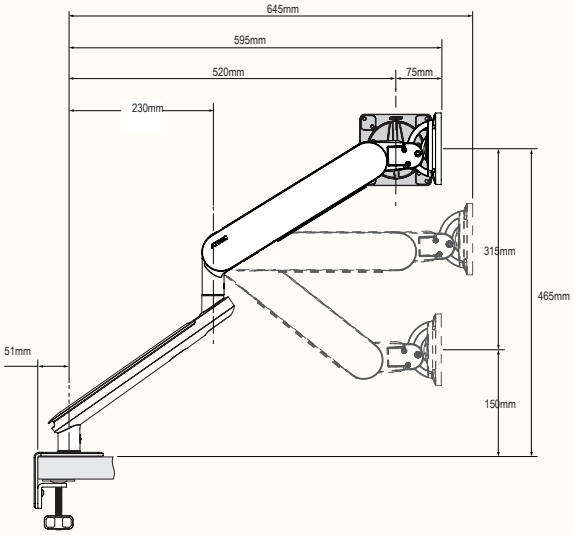

Dynamic Arm Side View

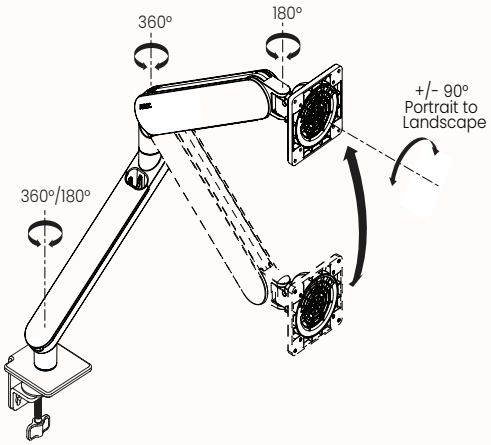

Dynamic Arm Movement

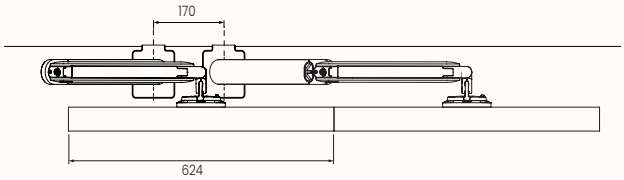

Positioning for Dual Displays*
*Arms must be pruchased separately.

Zenith

Platinum Series Monitor Arm

Features:
The Platinum Series Monitor Arm combines performance and convenience with dual USB 3.0 ports, 28 cm of smooth gas-spring height adjustment, and compatibility for monitors up to 40" (1.5–8 kg per arm). Designed for single or dual setups, it offers clamp and grommet mounting options, full VESA compatibility (75 x 75 mm and 100 x 100 mm), and a sleek, adaptable design—ideal for both corporate and home offices.

Design: FELLOWES

Warranty: 5 years

Certification: BIFMA, FIRA Compliant

Finishes:

White

Black

Dimensions:

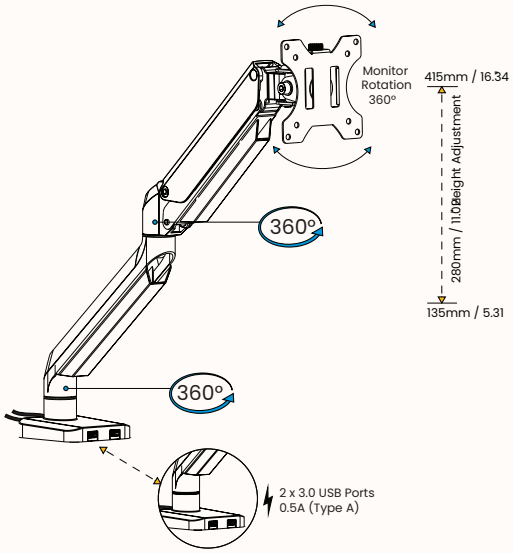

Platinum Single

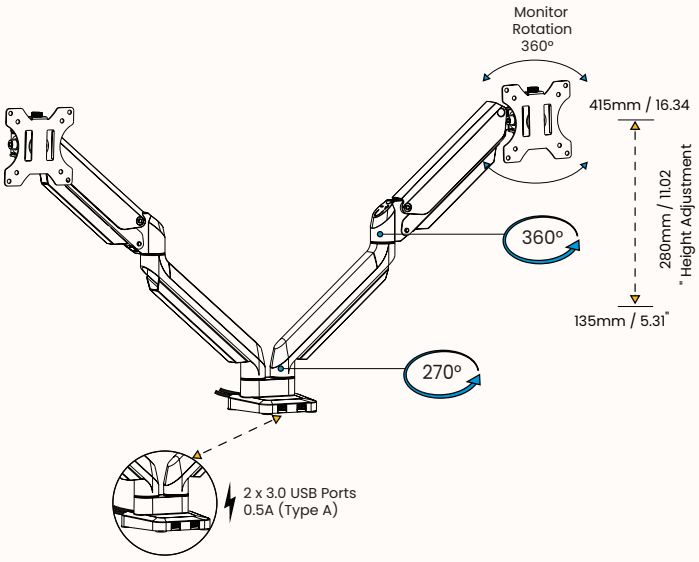

Platinum Dual

Rising Monitor Arm

Features:
The Rising Monitor Arm combines sleek design with ergonomic performance, featuring a gas spring mechanism for smooth positioning that reduces strain and boosts comfort. With SnapKinect™ for quick assembly, RotationStop™ for controlled movement, and a quick-release VESA plate (75 x 75 mm and 100 x 100 mm), installation and adjustment are effortless. Supporting 2–12.7 kg monitors and compliant with EN ISO 9241-5 standards, it's a versatile, health-focused solution for any workspace.

Design: FELLOWES

Warranty: Lifetime

Certification: BIFMA, FIRA Compliant

Awards:
- Ergonomic Excellence by Fira International
- Red Dot Design Award 2024
- iF Design Award 2024
- IDEA International Design Excellence Award 2024

Finishes:



Designer white



Black

Dimensions:

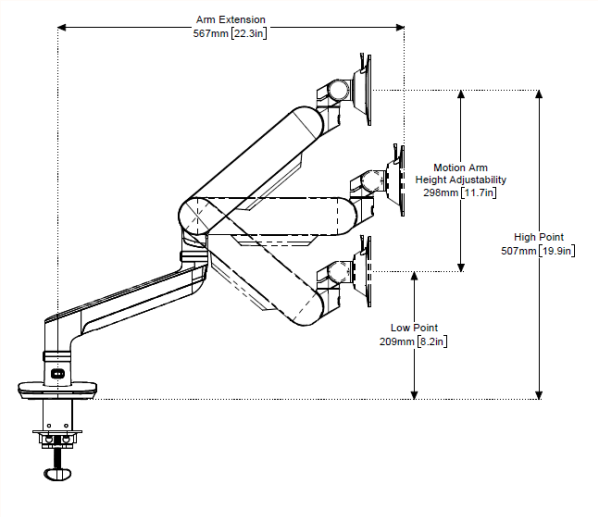

Rising Single

Max Screen size single arm: suits up to 49" curved ultrawide and up to 72" flat screen (*subject to weight capacity)

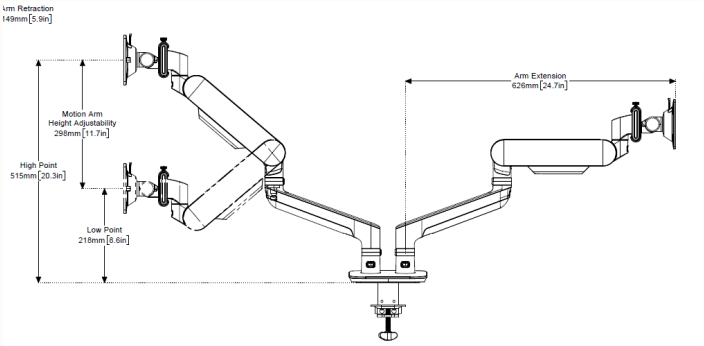

Rising Dual

Max Screen size dual arm: suits up to 34" curved ultrawide and up to 56" flat screen per arm
(*subject to weight capacity each arm)

Tallo Monitor Arm

Features:
The Tallo Monitor Arm supports screens up to 40" (1–9 kg per arm) with 32 cm of gas-spring height adjustment for effortless positioning and improved posture. It offers flexible clamp or grommet mounting, quick-release VESA compatibility (75 × 75 mm and 100 × 100 mm), and meets EN ISO 9241-5 ergonomic standards. Reliable and user-friendly, it's ideal for both corporate and home offices to boost comfort and productivity.

Design: FELLOWES

Warranty: 15 years

Certification: BIFMA, FIRA Compliant

Awards:
- Ergonomics Excellence Award by FIRA International
- Red Dot Award: Product Design 2022

Finishes:



White Black

Dimensions:

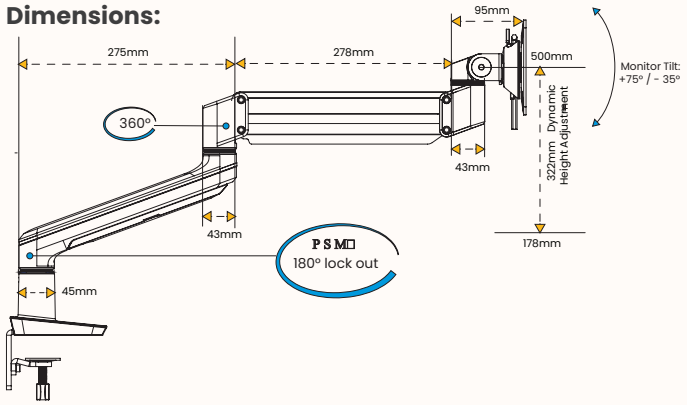

Tallo Single

Screen size single arm: suits up to 40"

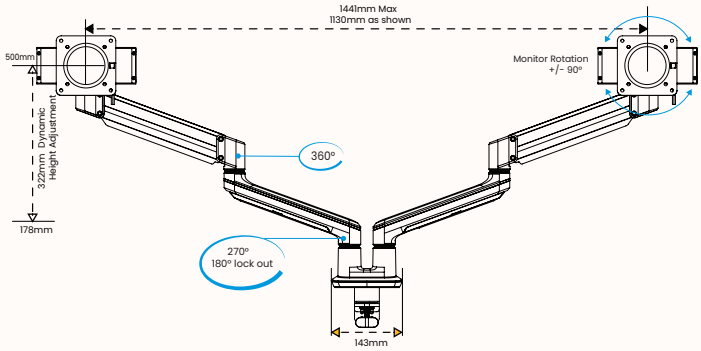

Tallo Dual

Screen size dual arm: suits up to 40"

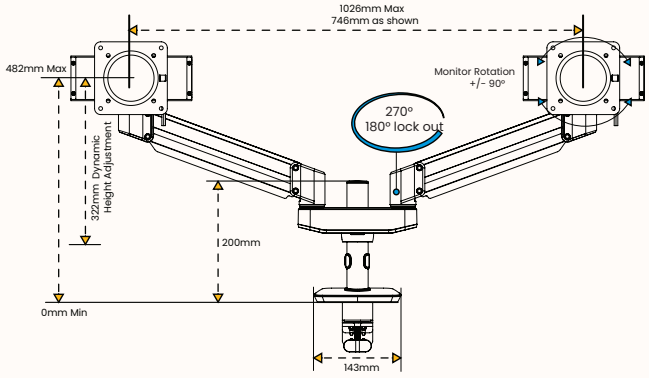

Tallo Dual Compact

Screen size dual arm: suits up to 40"

Apollo Classic Monitor Arm

Features:
This monitor arm system offers easy customisation to suit individual needs, with a durable powder-coated finish in silver, white, or black. Built from diecast zinc, aluminium alloy, and steel, it supports single, dual, or triple screen configurations and handles up to 12kg per arm (25kg on the pole). With adjustable grommet or split clamp mounting, it fits a wide range of desk thicknesse and with an assembly time of under five minutes.

Options:
• Additional monitor arms can easily be retro fitted
• Laptop tray, ideal for touch down or hot desk stations

Design: INTEG

Warranty: 5 years

Finishes:

White Black Silver

Dimensions:

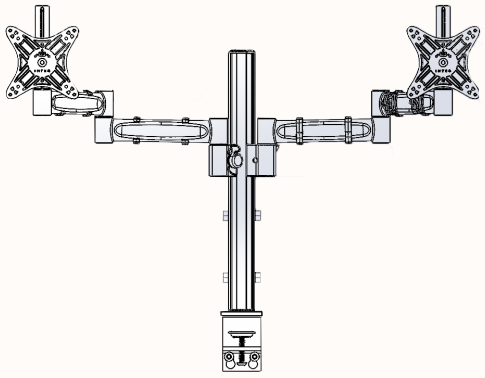

Vertical Adjustment: 335mm (13.18 in)
Horizontal Adjustment: 474mm (18.7 in)
Horizontal Pivot: 180 degree
Rotation (with VESA plate): 360 degree
Tilt: 145 degree
Maximum Screen Weight: 12kg (26.5 pounds)
Maximum Pole Weight (Balanced): 25 kg (55lbs)
VESA Compliant: 75 x 75 mm & 100 x 100mm
Recyclable content: 99% (based on weight)
Maximum Pole Weight (Balanced): 25 kg (55lbs)
Mounting Options: Adjustable Slimline Split Clamp with 5-95mm adjustment (D) Through Desk Grommet for desk thicknesses 5–70mm

Zenith

A20 Dynamic Base Mount Single Monitor Arm

Features:
The A20 is a user-friendly, ergonomic monitor arm designed for modern workspaces, offering smooth fingertip height adjustment. With clean lines, organic curves, and seamless cable management, it complements activity-based and co-working environments while freeing up desk space. Supporting screens up to 10kg.

Design: INTEG

Warranty: 15 years

Finishes:

White Black Silver

Dimensions:

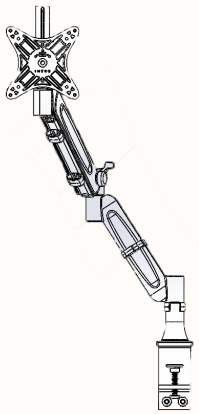

One-touch Vertical Adjustment: 270mm (10.6 in)
Horizontal Adjustment: 696mm (27.4 in)
Rotation: 180 degree
Tilt: -100 to +45 degrees
Maximum Screen Weight: 10kg (22 lbs)
Minimum Screen Weight: 0kg (0 lbs)
VESA Compliant: 75 x 75 mm & 100 x 100mm
Recyclable content: 99% (based on weight)

A20 Dynamic Post Mount Monitor Arm

Features:
The Integ A20 delivers user-friendly ergonomics with fingertip height adjustment and smooth monitor positioning. Its clean lines, organic curves, and modular design complement the Apollo Classic while fitting seamlessly into any modern workspace. With integrated cable management to reduce clutter, it suits both static and height-adjustable desks, freeing up valuable space.

Options:
- Single or dual monitor arm

Design: INTEG

Warranty: 15 years

Finishes:

White Black Silver

Dimensions:

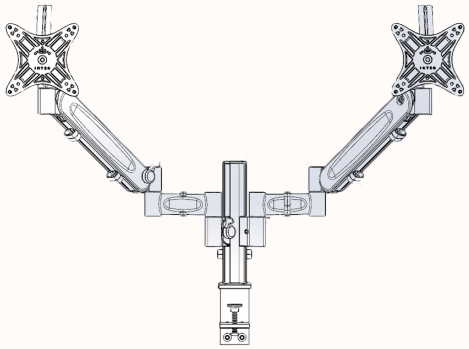

One touch Vertical Adjustment: 270mm (10.6in)
Manual Vertical Adjustment: 350mm (13.8in)
Horizontal Adjustment: 696mm (27.4in)
Rotation: 180 degree
Tilt: -100 to +45 degrees
Maximum Screen Weight: 10kg (22lbs)
Minimum Screen Weight: 0kg (0lbs)
VESA Compliant: 75x75mm & 100x100mm
Recyclable content: 99% (based on weight)

Valor-M Single Dynamic Monitor Arm

Features:
The Valor-M Single Dynamic Monitor Arm combines reliable performance with versatile functionality for modern workspaces. Featuring a durable aluminium neck, upgraded one-way bearing and internal coil spring, it delivers smooth monitor positioning, enhanced stability and consistent support to prevent monitor droop over time.

Supporting flat and curved monitors weighing up to 11kg, the Valor-M offers flexible installation with a pre-fitted desk clamp that doubles as a bolt-through mounting kit.

Integrated cable management keeps workspaces tidy, while adjustable reach, height, tilt and rotation provide ergonomic positioning. A quick-release VESA plate, landscape and portrait rotation, and an optional locking bolt complete this versatile, cost-effective monitor mounting solution.

Design: ELEVAR

Warranty: 10 Years

Finishes:

White Black

Dimensions:

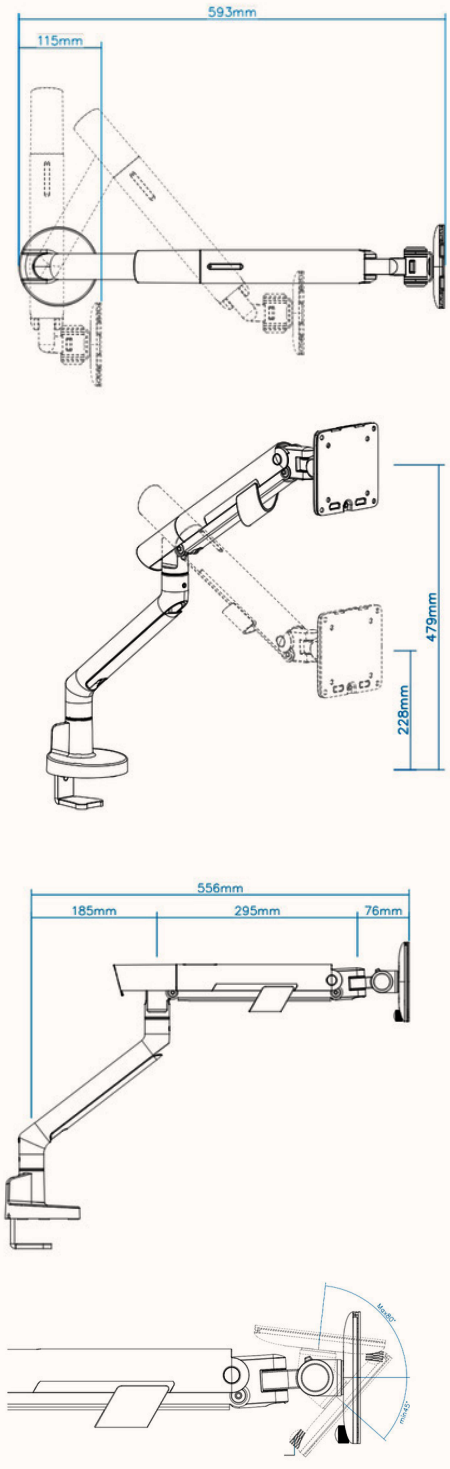

Zenith

Valor HD
Single Monitor Arm

Features:
Valor HD is a heavy-duty monitor arm that supports flat monitors from 2–20 kg and curved monitors up to 16 kg. Its spring-tensioned head allows smooth adjustment and holds the screen securely in position. The arm offers a maximum reach of 568 mm and a maximum height of 474 mm to the centre of the screen, with 70° tilt, 90° pivot and a choice of a 180° rotation stop or 360° swivel. A lockable quick-release VESA plate supports 75 × 75 mm and 100 × 100 mm mounting patterns in portrait or landscape orientation. Supplied mostly assembled, Valor HD installs from above the worktop using a streamlined top clamp. A bolt-through grommet kit is included, and integrated cable management routes cables along both arm sections and at the rear.

Design: ELEVAR

Warranty: 10 Years

Finishes:

White

Black

Dimensions:

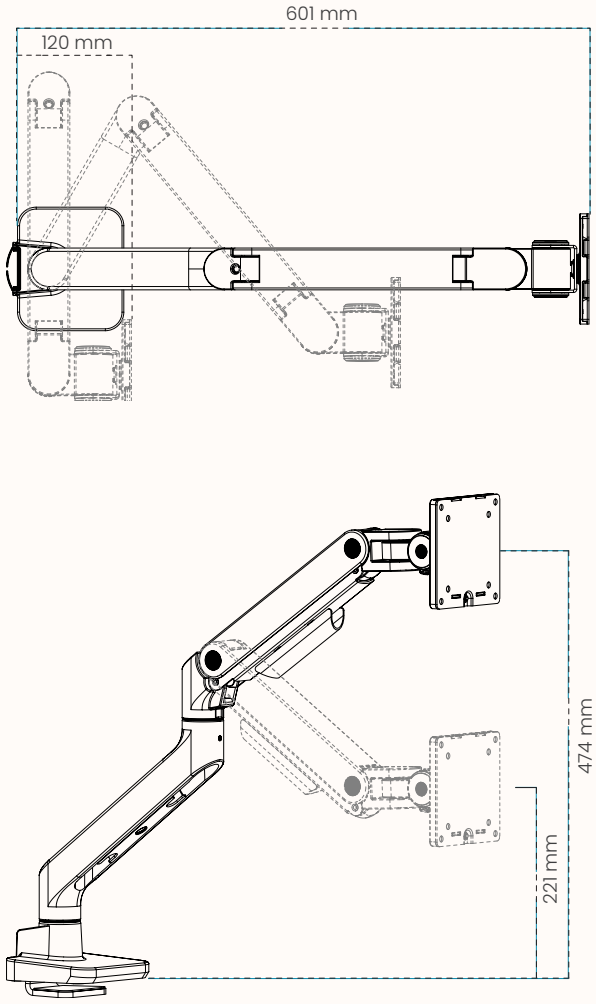

Zenith

Valor HD Dual Crossbar Monitor Arm

Features:
The Valor HD Dual Crossbar is a heavy-duty monitor arm that supports two screens up to 32 inches each, with a capacity of 1–9 kg per flat monitor or up to 7.5 kg per curved monitor. The crossbar keeps both screens aligned and at a consistent viewing distance, while the spring-tensioned head and adjustment handle allow smooth repositioning and hold the screens securely in place. The arm offers a maximum reach of 554 mm and a maximum height of 474 mm to the centre of the screen, with 20° tilt, 20° pivot, a tension indicator and a choice of a 180° rotation stop or 360° swivel. Lockable quick-release VESA plates support 75 × 75 mm and 100 × 100 mm mounting patterns in portrait or landscape orientation. Supplied mostly assembled, the arm installs from above the worktop using a streamlined top clamp. A bolt-through grommet kit is included, and integrated cable management routes cables along both arm sections and at the rear.

Design: ELEVAR

Warranty: 10 Years

Finishes:

White

Black

Dimensions:

